ASSEMBLY INSTRUCTIONS

CABINS

HI5VP

HI5VPP

HI5VPC

HI5VPG

To complete the cabin assembly, it is necessary to have:

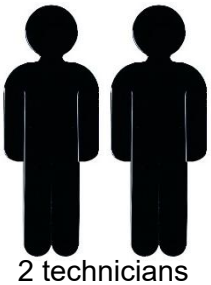

2 technicians

30 minutes

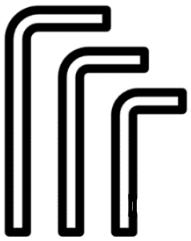

3 Allen keys: 2 – 2.5 – 3 mm

The different parts of the HI5VP cabin hood

1. Sides
2. Melamine Bottom
3.et 4. Straight bottom profiles
5. Inclined plane
6. Top straight profile
7. Top glass
8. Curved profile (quarter-round section) upper
9. Non-slip feet
10. Allen Keys

*The assembly of the **HI5 base in** 6 steps:*

1. Place one side of the cabin flat on the floor protected by cardboard or on a suitable work surface

1bis. Note for mounting the HI5VPG

2. Clip the two anti-slip on the bottom of the side, perform the same operation on the second one

3. Lay the first straight profile on the smaller side and screw in

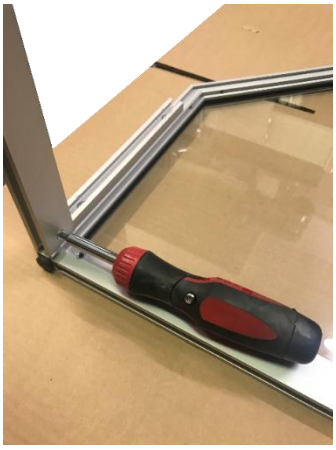

4. Slide the melamine (white part) then slide the second straight profile and screw in

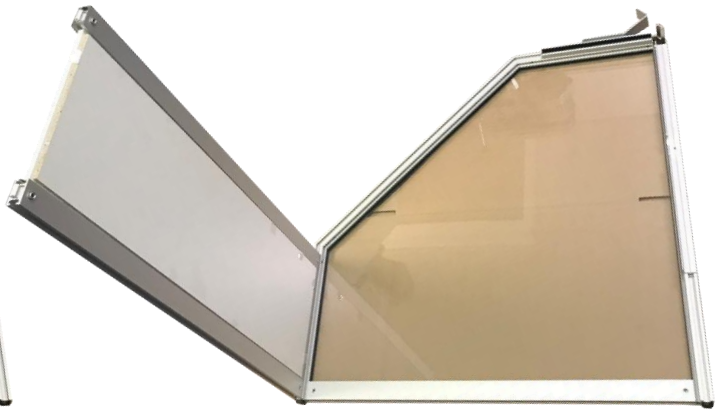

5. Slide the inclined plane (white side down) into the rail of the straight profile

6. Slide the upper straight profile to the top of the inclined plane and screw in

Finalize your cabin according to the model:

HI5VP (a): page 6

HI5VPP (b): page 7

HI5VPC (c): page 8

HI5VPG (d): page 10

For HI5VP, follow the instructions below

(a)1. Snap the quarter-round profile onto the tripod

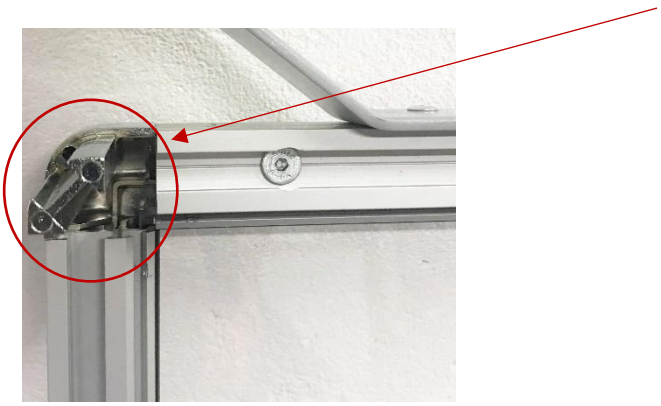

(a)2. Slide the glass between the two profiles by holding a light pressure on the quarter-round section profile

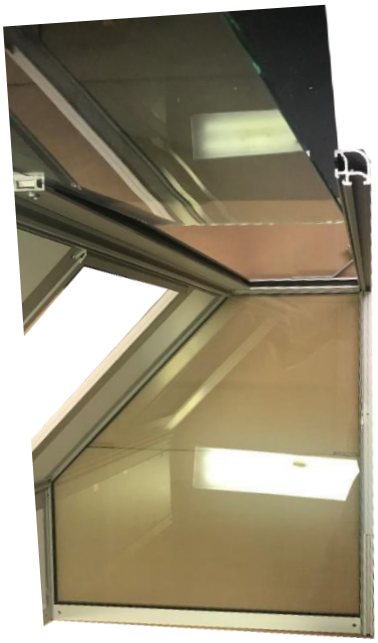

(a)3. Carefully position the second side. Once secured, screw in the 4 profiles

For HI5VPP, follow the instructions below

(b)1. Snap the quarter-round section profile onto the tripod (see HI5VP page 5) - Check that the hinges are firmly attached to the profile

(b)2. Slide the glass between the two profiles while maintaining light pressure on the quarter-round section profile (see HI5VP page 5)

(b)3. Carefully position the second side. Once secured, screw in the 4 profiles (see HI5VP page 5)

(b)4. If necessary, adjust the hinges and insert the studs.

CAUTION: The studs must be inserted in opposite directions **-> <-** to avoid the risk of the door disconnecting in the raised position.

(b)5. Finally, gently slide the door into one of the studs and then into the other.

(b)6. Finally, screw the hinges of the door to secure everything.

For HI5VPC, follow the instructions below

(c)1. Snap the quarter-round section profile onto the tripod (see HI5VP page 5)

(c)2. Slide the high glass between the two profiles while maintaining light pressure on the quarter-round section profile (see HI5VP page 5)

(c)3. Slide the double high slide

(c)4. Position and screw in the guide rail (initially inserted on the profile)

(c)5. Gently position the second side, screw the 4 profiles together

(c)6. Straighten the cab to the desired work location

(c)7. Remove the single bottom slide

(c)8. Insert the first door from above on one of the rails, insert the second from above on the other available rail

For HI5VPG, follow the instructions below

(d)1. Slide the small I-shaped elements to the top in the groove of the quarter-round profile on the sides and then screw them in.

(d)2. Slide the door jambs to the top.

(d)3. Insert the small screw connection element between the two grooves and then screw it in. Be careful not to let it overshoot.

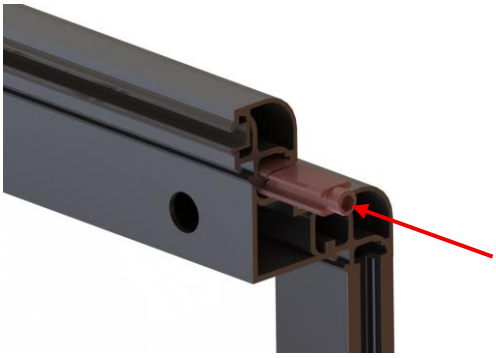

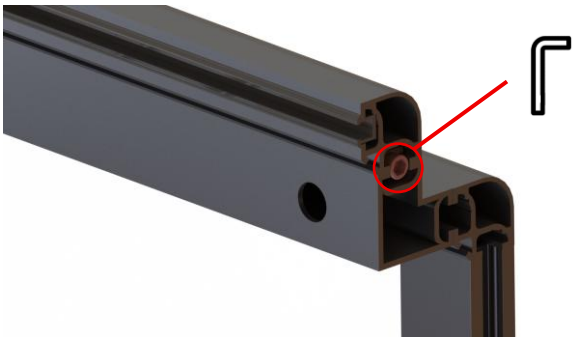

(d)4. Repeat for the other side.

(d)5. Slide the door through the two small grooves in the jambs and lock it into the holes.

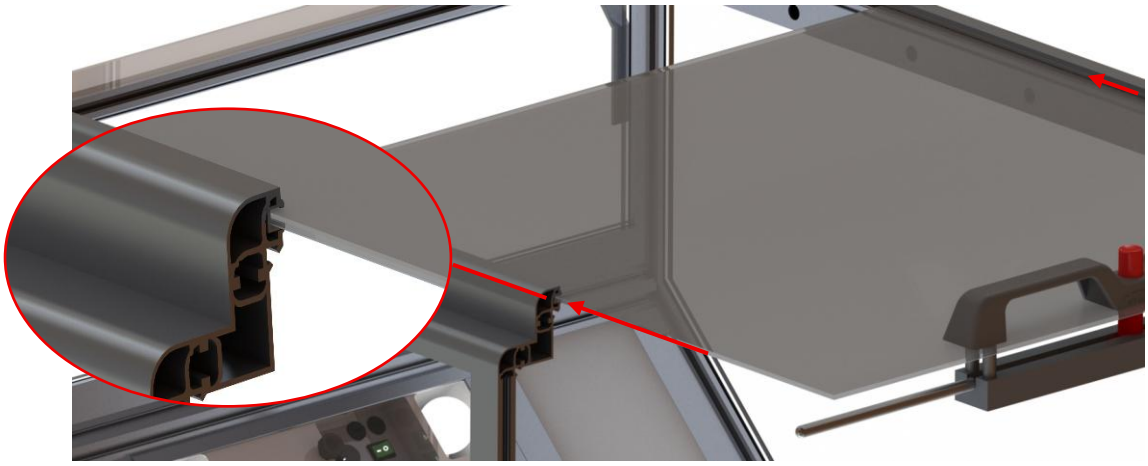

(d)6. To secure the sides of the hood, we recommend installing small wedges on each side. The inner edges should be 71.8cm apart (red arrow). For their spacing with the table it all depends on the distance at which you position the hood (green arrow), we recommend placing them at 14mm for a hood at the edge of the table.

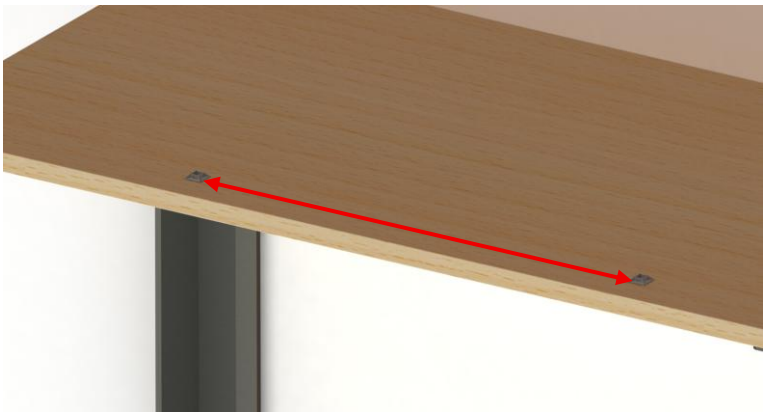

Contact us for any questions

FTM Technologies SEM

78, rue Raymond Poincaré
92000 Nanterre, FRANCE

info@ftm-technologies.com
Tél : + 33 1 40 86 00 09
Fax : + 33 1 40 86 16 45

Our Company

Our know-how has been with you for more than 100 years.

We serve more than a thousand companies each year in all sectors and provide them with work tools adapted to their activity.

We offer standard solutions or design tailor-made projects adapted to our customers' environments and problems.
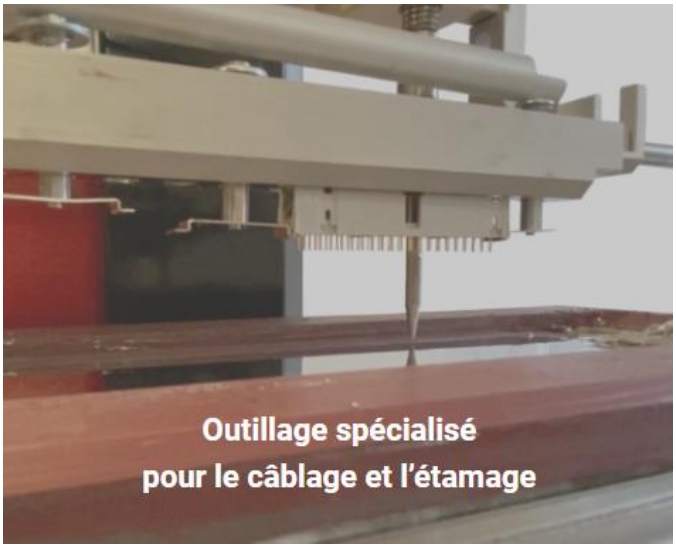
Our area of expertise extends over 4 main product categories: